Presorted Standard
U.S. POSTAGE
PAID
Lake City, MN 55041
Permit No. 33

The Lake City Shopper

Published by The Lake City Graphic
651-345-3316 • *ads@lakecitygraphic.com*
Guaranteed Over 8,000 Circulation
Vol. 63 - No. 46 • Tuesday, January 2, 2024
111 SOUTH 8TH STREET • P.O. BOX 469, LAKE CITY, MINNESOTA 55041-0469

ADVERTISING DEADLINE!
The deadline for ALL advertising for The Shopper is 2 P.M. on Thursday

"We fix QuickBooks"
JackHarvey LLC CPAs
Jolene Harvey, CPA Michael Oliver, CPA
Ben Opsahl
Plainview, MN

We are certified public accountants who have extensive knowledge in QuickBooks. Call us today to learn how to manage your business using QuickBooks.

Call for a **free** QuickBooks Appraisal.
1-800-788-6490

TACOS
Thursday Nights
3:30 P.M. - 7:30 P.M.
SHORT ORDERS AVAILABLE
Phone 651-345-4212
The Friendly Hometown Bar!
bWells BAR
FRONTENAC

PAYING CASH for pre-1965 coins and older currency. Local, fair, well-established – references available. Ed at 507-208-0450. 22-35tfc

PAYING CASH for junk cars and trucks. Will haul. Phone 651-380-9498. 1-41tfc

BOWLING IS A LIFETIME SPORT
Join Junior League Bowling!
Informational Meeting
Sunday, Jan. 7
12:30 P.M.
Port 104 Lanes
Kids kindergarten through 12th grade are invited to join.
Questions, contact Corey Laqua, 651-764-1105.

MOUNT PLEASANT TOWNSHIP Notice of filing: Notice is hereby given that affidavit of candidacy may be filed with the Mount Pleasant Township clerk from January 2, 2024 through January 16, 2024 until 5:00 p.m. for the offices of 1 Township Supervisor, 3 year term, and 1 Township Clerk, 2 year term. Filings may be made at the clerk's home, Ellen Klennert, Mount Pleasant Township Clerk, 35451 County Rd 78, Lake City, MN 55041, 651-764-0601.

CHESTER TOWNSHIP Notice of Filing: Notice is hereby given that affidavit of candidacy may be filed with the Chester Township Clerk from January 2nd, 2024 through January 17th, 2024 until 5:00 p.m. for the offices of: 1 TOWNSHIP SUPERVISOR, 3 year term; 1 TOWNSHIP CLERK, 2 year term. Jake Atkinson, Chester Township Clerk, 65082 County Road 68, Lake City, MN, 55041. 32-33-45-46c

Quality Work... Affordable Price!!
XTREME HARDWOOD FLOORS
Installation • Sanding • Refinishing
Over 25 Years Combined Experience Personally Handling Every Job!
National Wood Floor Association Certified • Insured
Steve Domke
507-254-9489
Free Estimates

Let's talk fence
Alpacas, Apples, Beef Cattle, Bison, Deer, Dairy Cattle, Dogs, Elk, Gardens, Goats, Gorillas, Grapes, Horses, Lions, Llamas, Ostriches, Raccoons, Sheep, Trout, Tigers, Yaks
K FENCE
62411 386th Ave., Zumbro Falls, MN
Phone 507-753-2943 • www.kfence.com
Free Estimates • Free Catalogs

REMINDER:
Lake City Recycling & Disposal Customers
WE NO LONGER ACCEPT ALUMINUM CANS FOR PURCHASE. THANK YOU.

NEWLY RE-OPENED!
Lake City FLORAL
110 S LAKESHORE DRIVE · LAKE CITY, MN 55041

WINTER BEAN BAG LEAGUE
Mondays Beginning Jan. 8
6:30 P.M. • Draw for Partners
Contact Jeff Moyer at 651-380-4110 for information.
Est.2010 PORT 104 Lake City, Mn
BAR • GRILL & BOWLING
104 N. Washington St.
Lake City, MN 651-345-2324

WABASHA COUNTY VETERAN SERVICE OFFICE
The Wabasha County Veteran Service Office understands the many issues veterans and their families face on a daily basis. We provide support and assistance to veterans seeking information about VA benefits and programs, as well as, state and local veterans benefits. These benefits include VA healthcare, service-connected disability compensation, VA pension, VA education, and VA burial benefits. We are located inside the Criminal Justice Center in Wabasha or you can call us at (651) 565-3864.
www.co.wabasha.mn.us/departments/veterans_services/index.php
www.facebook.com/wabashavets/
Veterans Linkage Line your link to experts
minnesotaveteran.org | 1-888-LinkVet (546-5838)

LEONARD ENTERPRISES
offering these complete contracting services:
- New Housing • Garages
- Remodeling/Additions
- Roofing • Cement Work
- Concrete Coloring & Stamping
- Pole Sheds • Free Stall Barns

FREE ESTIMATES
25 YEARS OF EXPERIENCE
CALL MARK AT 507-273-2738
MN Contractors License #20233340 Insured
Lake City Chamber of Commerce Member

THE BAKE SHOPPE
"Just Like Grandmas"
307 2nd street, Goodhue MN
TUESDAY 8:30-5:30
WED. - FRI. 8:30-4:30
SATURDAY 8:30-1:30
651-923-5623
Baked Goods
Coffee & Teas
Baking Supplies
Beans & Soup Mixes
Snacks & Candy
Gluten Free Products
Jams & Jellies
Deli Items
Gifts
...and more!
Soft Pretzels first Saturday of every month
Fresh Donuts all other Saturdays
MADE FROM SCRATCH | FRESH | NO PRESERVATIVES

Wishing you a
HAPPY NEW YEAR
STONE'S FAMOUS POPCORN CO. EST. 2013
Thank you for a good 2023!
See you in the spring!

Celebrate Recovery at South Troy Church
(A 12-Step Program)
Sundays at 5 p.m.
56817 Highway 63
Zumbro Falls, MN 55991
The purpose of Celebrate Recovery is to encourage men and women to find fellowship and celebrate God's healing power in our lives, as we work our way along the road to recovery, for whatever it is we struggle with.
Sunday Meeting Schedule:
5 p.m. - Fellowship & Food
5:45 p.m. - Large Group & Worship
6:30 p.m. - Small Group Sharing
Email:
celebraterecoverysouthtroy@gmail.com
or call 507-259-1442

EFFECTIVE, WHOLE-HOUSE HUMIDITY CONTROL
Healthy Climate® Whole-Home Bypass Humidifiers
$25 OFF
with this coupon
- **MAINTAINS OPTIMAL COMFORT** during heating seasons by minimizing problems associated with dry air
- **CREATES A HEALTHIER HOME** and lessens skin irritations, sore throats and respiratory problems
- **PROTECTS HOME FURNISHINGS** by reducing the risk of wood warping and cracking
- **PROVIDES AN EASIER TO USE** and less intrusive option to portable units – no need to constantly fill and clean units
- **AVAILABLE WITH AUTOMATIC CONTROL** to keep humidity precisely where you need it
- **5-YEAR LIMITED WARRANTY** on covered components

BANKS HEATING & AIR CONDITIONING
Proudly Serving The Lake City Area Since 1960
1245 N. 7th St. • Lake City, Minnesota
651-345-3380
Call for a free estimate or email your request to *banksheating@gmail.com*

CHRISTMAS TREE PICKUP
SATURDAY, JAN. 6
Starting at 1 P.M.
TREES MUST BE ON THE CORNER OF THE BLOCK
Residents are asked to put Christmas trees on the corner of their city block
NO SOONER THAN FRIDAY, JAN. 5, 2024.
Lions Lake City Sportsmans Club
As a community service, Lake City Lions & Lake City Sportsman's Clubs will pick up and dispose of the trees.
PLEASE REMOVE ALL PLASTIC, WIRES & ORNAMENTS!
Lions and Sportsman's Club members: Bring your truck/trailer if you have one available

Blossom Shop
Gifts • Flowers • Plants
Cabbage Patch Garden Center
917 Hiawatha Dr. W., Wabasha
651-565-3980 • 651-565-2995
Place your order online!
blossomshopfloristandantiques.com

The Lake City **Shopper**
Advertise in the print edition of *The Lake City Shopper* and your ad will also appear in the online version of the *Shopper*

Free access to the PDF version of the Shopper – Posted Online Every Tuesday!
Check it out @*www.lakecitygraphic.com/shopper*

WABASHA TREE CO.
Tree Trimming & Removal
Stump Grinding
Brush Mowing
Logging & Trucking
Landscape Mulch
Land Clearing
Dennis Dick
Certified Arborist
MN-4296A
651-565-3870

Free to New Residents!
Greeting Newcomers to Southern Minnesota Communities Since 1946! Call Today!!
Receive your Welcome Packet filled with helpful civic information and gift cards from area businesses.
Welcome Services For You
Kathy & Chuck Bristol
651-345-9111

RYAN CONSTRUCTION LLC
Millville, MN.
Concrete Flat Work
Ag Buildings
Steel Roofing
Cody Ryan
507-358-1916
License #BC807159 • Insured

RIVERSIDE TOWNHOMES
Now Taking Applications
3 BR, 2 BA
Attached garage, major appliances, non-smoking, no pets. Available now.
1109 N. High St., Lake City
PHONE: 651-345-5470
Contact:
lakecity@bergstad.com
for an application.
Equal Opportunity Housing

NOW LEASING:
2 & 3 BEDROOMS
515 N. 10th St., Lake City
www.lloydmanagement.com
UNDERWOOD TERRACE
2 & 3 BR Apts | Income Restrictions Apply
Section 8 Vouchers Welcome
LLOYD MANAGEMENT
Kim: (651) 347-2864

DEADLINES

In order to meet our press and delivery schedules, we ask for your cooperation in having your advertising and news copy into the Graphic office by the following deadlines.

Lake City Shopper (Tuesday Publication)
Display Advertising Deadline . . . . . Thursday, 2 p.m.
Classified Advertising Deadline . . . Thursday, 2 p.m.

Lake City Graphic (Thursday Publication)
News Deadline . . . . . Monday - 10 a.m.
Display Advertising Deadline . . . . Monday - 10 a.m.
Classified Advertising Deadline . . Monday - 10 a.m.

If you have a request for a photograph to be taken for the newspaper, please call our office at least 24 hours in advance. Thank you.

Lake City Graphic
111 South 8th St. • Lake City, MN 55041
Phone 651-345-3316 • Fax 651-345-4200
News email: *news@lakecitygraphic.com*
Advertising email: *ads@lakecitygraphic.com*

Office hours are Monday and Tuesday, 8 a.m. - 4 p.m.
Wednesday, Thursday and Friday, 8 a.m. - 3 p.m.
An after hours drop box is located at the front of the building.

WANTED: All types of junk vehicles — cars, trucks, pick ups, etc. Also, roll-off boxes available for scrap metal. Poncelet Metals Auto. Joe and Dan Poncelet. Ph. 651-923-4074. 33-21tfc

FIREWOOD FOR SALE: $20 per pickup load. Felled, air dried birch 3-12" dia. You cut to lengths; Easy loading. Phone 651-345-6122 20-8tfc

ALFALFA HAY FOR SALE: 3x3x8 bales, no rain, tested. Phone 651-345-2853. 44-32tfc

ADVERTISE YOUR SERVICE here for as little as $30/month. To learn more call The Lake City Shopper & Graphic at 651-345-3316. 27-15tfnc

GRAIN VAC FOR RENT. Reasonable rates. Also, used for filling silos. Call for availability, Dan Tipcke, 651-923-4616 or 651-764-4899, cell.

WANTED: CROPLAND TO RENT for 2023+. Conservation-minded (references available). Cash or flex lease options. Please call Matt Miller at 507-272-2342. 29-42tfc

WOULD LIKE TO RENT crop land for 2023 and beyond. Matthew Kehren and sons, 651-764-2065. 37-25tfc

WANTED: CROP LAND to rent for 2023 planting season and beyond. Also seeking to purchase crop land. Eric and Kendra Walker, 651-448-6473. 13-1tfc

You've got it.
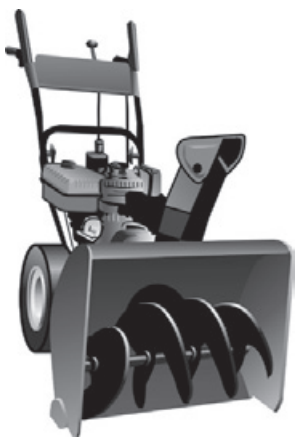
Someone else wants it.
Sell it in the classifieds.
Call The Lake City Shopper & Graphic
651-345-3316

BARBER MIKE JULIAN is available Wednesdays at The Total Look. Call 651-345-2338 or Mike's cell at 651-380-2781 to make an appointment with Mike! 213 S. Lakeshore Dr., Lake City. 44-47-32-35c

FRESH PAWS DOG GROOMING. All breeds, sizes and coat conditions. Call Jessica at 651-448-6624 to schedule your appointment. 44-47tfc

SWEET STITCHES. Alterations and sewing. 25 years experience. Lake City. Call Deborah 651-380-9507. 7-47tfc

HOUSE CLEANING - Looking to clean your home! 14 years experience, free estimates. Please call 763-439-9796. 20-8tfc

"Empowering you to live your best life!" - Chakra Balancing, Intuitive Energy Healing & Sound Healing. Healing your life from surviving to thriving, check out my website *MVRhealing.com* or call to set up your appointment 651-380-8465 Maria Voorhees-Reincke. 33-21tfc

LAKE CITY APPLIANCE AND VIDEO. Your full service hometown appliance store. General Electric, Hotpoint and Haier dealer. Area's largest video library. TV-DVD-VCR. Open 9 a.m.-5 p.m. Monday through Friday, 9 a.m.-4 p.m. Saturday, closed Sundays. 112 S. Lakeshore Dr., Lake City. Ph. 651-345-3024. 46-34c

WANTED: Broken or chipped windshields - "One Call Does It ALL". Auto Glass Master, servicing all of your auto glass repair and replacement needs. Free mobile service, call 651-345-0126. 46-34c

BAUER'S STUMP REMOVAL and TREE REMOVAL, LLC - Fast, courteous service, free estimates & low prices. Sod available, black dirt, clean up. Call today, 651-345-2293. 6-46tfc

ANTIQUES. I buy, sell, strip, repair, refinish antique furniture. We also buy collectibles. Call Randy for estimates. 30+ years experience. Ph. 507-990-4291, Lake City. 5-6-45-45p (3.22 12 mo)

FELBER & SONS ROOFING
Fully Insured
MN License #BC385222
ALL TYPES OF ROOFING
Hot Tar - Gravel - Shingles
Rubber Roofing
Dick Felber 651-380-9266
Dan Felber 507-254-0356

JAKE DAVIDSON PAINTING, LLC
Residential & Commercial
Interior & Exterior
Woodwork Finishing
Wallpaper Removal
Sheetrock Taping & Texturing
651-380-2703

KT Bee Creations
Custom Apparel Printing, Embroidery, Design & More
Contact Katie today:
507.208.1066
katiebee228@gmail.com
31786 Maple Court
Lake City, Minnesota

Pritzl STORAGE
4 LOCATIONS TO SERVE YOU
HOUSEHOLD • TRUCKING • BOATS • MOTORHOMES
651-345-4366
(Office) • North 10th St. • Lake City, MN 55041
Check us out at *pritzlstorage.com*

Make your business presence known!
REACH OVER 8,000 HOMES & BUSINESSES
Advertise your business or service with this size ad in the Lake City Shopper for only $50.00 per week. Other size options available.
For details call 651-345-3316 or email *ads@lakecitygraphic.com*

SERVICE SPECIAL
WINTER PACKAGE
$79.95 with this coupon
Plus tax & disposal fees.
On most cars & trucks.
Includes up to 5 quarts of oil.
• Oil Change • Brake Inspection • Belts & Hoses Check • Filter Check • Antifreeze Check • Battery Test • Tire Rotation & Pressure Check • Fluid Top-off • Multi-Point Inspection
Up to five quarts of Motorcraft® Synthetic Blend oil and Motorcraft® oil filter, rotate tires, check brake pad wear, belts, hoses and heater operation. Taxes, diesel vehicles and disposal fees extra. Hybrid battery test excluded. See Service Advisor for details.
Valid with this coupon at Tom Heffernan Ford, Inc.
We will pick up your vehicle from your home or place of work at no extra charge.
For appointments, call 651-345-5313 and ask for Mark.
PHONE 651-345-5313
TOM HEFFERNAN FORD
310 N. Lakeshore Drive Lake City
Ford Cars · Ford Trucks
SERVICE DEPARTMENT OPEN
Monday-Friday 7 A.M.-5 P.M.; Saturday 8 A.M. - Noon

BUSINESS and SERVICE DIRECTORY

PETERS SEED/MUSTANG SEED DEALER
Corn, Soybeans, Cover Crops
Wayne Peters • 651-764-0301

BEAR VALLEY LIVESTOCK SERVICES
Custom Cattle Chute Work Since 2021
Implant • Vaccinate • Dehorn • Castrate
McKell Lemmerman • 507-884-0039

BEAR VALLEY LAND MANAGEMENT
FORESTRY MULCHING
PROPERTY CLEAN UP • LAND CLEARING
Call Tyler for Free Estimates 651-747-7231

A TO Z POWER WASHING
Siding, Driveways, Decks, Boats, Gutters, Frozen Sewer Lines, Ice Dams & MORE!
Jim Borgschatz, Owner • 507-259-5265
Email: *info@azpowerwashing.net • azpowerwashing.net*

America's Mechanical Co. - PLUMBING
Water Leaks • Kitchen Updates • Showers & Tubs • Bathroom Remodels
507-272-4366 - Lake City, MN
For all of your residential and commercial plumbing needs.

RON SHERIDAN · www.drsquarefoot.com · 651-246-4146
Real Estate Auctions - Live or Sealed Bid - #25-33
Certified Appraisals - Personal Property - #08404
The Best Fertilizer for Land is the Footprint of the Owner

EAGLE EXCAVATING AND SEPTIC
Installation • Replacement • Septic Repair • Basement • Sewer, Water Hook-ups
Licensed - Insured - Bonded
507-951-5356 Kevin Funk 507-273-2497

RYAN REPAIR, INC.
YOUR LOCAL INDEPENDENT TIRE ONE DEALER
Auto & Truck Service Professionals You Can Trust
511 S. 8th St., Lake City • 651-345-4790

ATKINSON CONSTRUCTION
Of Oak Center Inc.
Craig & Jake Atkinson • Excavating and Grading Contractor
Office: 507-753-2180 • Cell: 507-273-2489 *507-251-8150

JASON YORDE CONSTRUCTION LLC
New Construction • Remodeling • Decks • Framing • Siding • Roofing
30472 Homer Court, Frontenac, MN 55026
651-380-4916 • *jasonyorde@ymail.com* • Lic #BC654019

POWDER COATING SOLUTIONS, INC.
Blasting and Coating Specialists
1115 N. 7th Street • Lake City, MN 55041 • Phone: 651-345-7507
www.powdercoatingmn.com

Bucky Adams' VALLEY BODYWERX
Professional Auto Body Services • Collision Repair • Auto Glass
507-753-2918 • 1-888-550-3368 • Zumbro Falls, MN
Get more value from the BUCK!

RIPLEY DENTAL
DR. REBECCA RIPLEY
113 W. Center • Lake City
Phone 651-345-3335

This Space Available For Your Listing
Call 651-345-3316 To List Your Service

HIC#C139366 | BC765730
BECAUSE YOUR FOUNDATION IS CRACKED.
BEFORE

AFTER

LIMITED TIME OFFER
$525 OFF*
› FOUNDATION REPAIR
› BASEMENT WATERPROOFING
› CRAWL SPACE REPAIR
› CONCRETE LIFTING
651-927-3040
INNOVATIVE BASEMENT AUTHORITY
A Groundworks Company
GET A FREE INSPECTION
*Ten percent off any job over $2500 up to a max of $525. Coupon must be presented at time of inspection. Offer may not be combined with any other offer. Limit one per customer. Ask inspector for further details. Promo valid through 12/31/2023.
Angi BBB

Ed Hinchman Collection

ESTATE ADVERTISING AUCTION

Friday, January 5 – 9 a.m.
1625 Butts Ave., Tomah, WI 54660

Located in heated building at the Monroe County Fairgrounds with food and beverages provided.

NO BUYERS PREMIUM if you attend in person!
ONLINE BIDDING AVAILABLE (different terms apply to online bidding).

SELLING - Old signs of all kinds, 40 gas pumps, oil can showcase, air meters, advertising clocks & thermometers, service station hats, cast iron seats & school bell, scooters, lubesters, oil can racks, mini riding lawn mower, motorcycle carnival ride, oil bottle racks, pedal car & tractor, gas pump globes, oil cans, plus much more interesting stuff!

WWW.MILLERSAUCTIONCO.COM
Auction Conducted & Clerked by Miller's Auction Co. #347-053
Glenn Miller 715-299-2543 *wisconsinjunk@yahoo.com*
PO BOX 143, Hixton WI 54635
Auctioneer Tim Barnum #1284
Terms - Cash or check. Credit card 4% convenience fee.

HUETTL'S
LOCKER & DRESSING PLANT
Hwy. 61 & 63 No. - Lake City

Like Us on Facebook!
Advertised Specials Good through Tuesday, January 9, 2024.

Special of the Week....
LEAN - FROZEN 1# PKG.
SPECIAL ORDER 1 1/2# & 2# PKGS.
GROUND BEEF.... $3.99 lb.

U.S.D.A. CHOICE **T-BONE STEAKS** ..... $10.99 lb.
U.S.D.A. CHOICE **PORTERHOUSE STEAKS** ..... $13.99 lb.
BONELESS, CENTER CUT **PORK CHOPS OR ROAST** ..... $2.99 lb.
8 DIFFERENT VARIETIES - BACON WRAPPED **CHICKEN BREASTS** ..... $5.99 lb.
SMOKED **PORK CHOPS** ..... $4.99 lb.

DELICIOUS AMISH CANDY
from Miller Candy Shoppe – $10.99 *1 lb. bag*
Cashew Crunch, Chocolate Covered Cashew Crunch, Caramel Truffles, Raspberry-Orange Truffles, Toffee, Scrunch

FREE DELIVERY TO ELDERLY & SHUT-INS ON FRIDAYS
"Please have $10 minimum orders"

Monday through Friday: 8:30 A.M. - 5 P.M. Saturday: 8 A.M. - Noon
FOOD STAMPS ARE ACCEPTED
U.S.D.A. Inspected
PHONE 651-345-3424

WELLS CREEK BOARDING KENNELS, 28642 Lehrbach Rd. in Red Wing. Pet boarding and day care for your pet(s). Heated and air conditioned with plenty of TLC for every pet. Call Audrey at 651-388-8908. 4-44tfc

ADVERTISE YOUR SERVICE here for as little as $30/month. To learn more call The Lake City Shopper & Graphic at 651-345-3316. 27-15tfnc

IF IT NEEDS CLEANING - Call Lynn - she'll clean anything. Ph. 608-248-2681, after 5 p.m., or 715-495-4949, cell. 8-48tfc

WOMEN'S CENTER 24 hour crisis. Ph. 651-385-8600 for safe housing, advocacy and resources. 8-21tfc

PREPARE FOR POWER OUTAGES today with a Generac Home Standby Generator. Act now to receive a FREE 7-Year warranty with qualifying purchase* Call 1-651-927-3341 today to schedule a free quote. It's not just a generator. It's a power move.

VOLUNTEER OPPORTUNITIES

Elder Network - Elder Network is a non-profit organization that has been serving seniors for 30 years.

Their mission is to help individuals impacted by the limiting effects of aging to have an optimal quality of life.

Elder Network supports seniors with visiting volunteers, respite care, companion care (whch means any light duty housekeeping, meal prep, errands, grocery shopping, etc.) that can make it possible to keep their independence. Note: We do not do any personal cares or medical services. We offer cargiver support and workshops, as well as other workshops for relevant senior topics.

If you enjoy working with seniors and could donate a few hours a week, we'd love to talk to you.

Give us a call or email us 651-564-0351 *bonnies@elder-network.org*.

BEAR VALLEY FLOORING is ready for your next flooring project. We sell carpet, vinyl, and the awesome luxury vinyl plank at a very reasonable price. From start to finish, new construction or existing. Call Dan for an appointment at 507-208-2289. Have a great day! 40-28tfc

JEREMY SOMMER FIREWOOD • Bulk and Bundled Firewood • Custom Firewood • Tree Trimming and Removal • Brush Chipping • Stump Grinding and Clean-up • Chain Saw Sharpening. Free Estimates. Insured. Ph. 651-764-0619. 31-19tfc

TRAVIS COYLE PAINTING LLC. Interior and exterior, commercial, industrial. Fully insured. Free Estimates. Call or text 651-380-9541. 22-10tfc

PROFESSIONAL ALL BREED DOG GROOMING. Call for appointment. Gerken's Town & Country, 801 W. Lyon Ave., Lake City or call 651-345-6362. 43-31tfc

You've got it.

Someone else needs it.

Sell it in the classifieds.

Call The Lake City Shopper & Graphic
651-345-3316

MAZEPPA AREA FOOD SHELF
239 1ST AVE. NORTH

HOURS OF OPERATION
2nd Thursday
9-11 AM &
3:30-5:30 PM
4th Thursday
3:30-5:30 PM

Serving Mazeppa, Bellechester, Zumbro Falls Area
mazeppafoodshelf@gmail.com

For *FAST* results, advertise in the CLASSIFIEDS.



Call 651-345-3316 to place your classified ad today!

APEX ELECTRIC

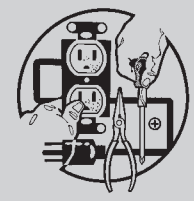

Specializing in Small Residential Projects in the Lake City Area
651-448-6525
License # EA799210

LAKE CITY GRAPHIC
OFFICE HOURS
Monday & Tuesday
8 A.M - 4 P.M.
Wednesday, Thursday & Friday
8 A.M. - 3 P.M.

LAKE CITY GRAPHIC
&
LAKE CITY SHOPPER
111 South 8th Street, Lake City
Phone 651-345-3316
www.lakecitygraphic.com
email graphic@lakecitygraphic.com

An after hours drop box is located at the front of the building.

If you didn't read last week's
LAKE CITY GRAPHIC
here's a sample of the news stories you missed!



- *Lawyer, assistant retire after decades of working together*
- *El Barco Bar and Grill sails into town*
- *Legion and Auxiliary donate $5,000 to school outdoor kitchen classroom*
- *Group promotes wellness at school*
- *Masons help library friends with third Little Free Library*
- *School staff make annual 'Cookies for a Cause' donation*
- *Matzke, Wallerich win Triple "A" awards*
- *Grant allows purchase of air boat*

Don't miss another issue!
Visit lakecitygraphic.com/subscribe or call 651-345-3316 to subscribe today!

Get Ready for Winter Driving
with one of these Sharp, Low Mileage, All Wheel Drive Vehicles!

CELEBRATING 50 YEARS

'21 FORD ESCAPE SE - 4 door, 4x4 all wheel drive, only 17,000 actual miles, Ford program vehicle, cross traffic alert, rear view camera, SOS post crash system, aluminum wheels, power lift gate, hot steering wheel, remote start system and more, gorgeous rapid red metallic finish ..... ***Was $31,900*** **SALE $29,995**

'20 FORD EDGE SEL - all wheel drive, 4x4, only 17,000 actual miles, Ford program vehicle, hot leather seats, cold weather package, hot steering wheel, hands free foot activated lift gate, remote start, power seat, lane keeping system, reverse camera and more, loaded, gorgeous grey metallic finish, factory warranty ..... **SALE $36,900**

'19 FORD ESCAPE TITANIUM - 4x4, one owner, sold and serviced by us since new, leather hot seats, navigation system, reverse camera, power moon roof, aluminum wheels, trailer tow package, loaded, show floor new, metallic white finish ..... **SALE $25,900**

'21 FORD EDGE SEL - all wheel drive 4x4, 19,000 actual miles, factory program vehicle, hot power seats, Ford co-pilot system, reverse camera, power lift gate, remote start, system, cold weather package, hot steering wheel, panoramic power moon roof, 18" aluminum wheels and more, gorgeous burgundy velvet metallic finish ..... **SALE $36,900**

'21 FORD ECOSPORT SE – 4x4 SUV, 7,000 actual miles, rear view camera, power moon roof and more. Ford Motor Company program vehicle. Show floor new. Gorgeous shadow black finish. Ideal back to school car for that student..... ***WAS $27,900*** **SALE $26,900**

'20 FORD EDGE SEL – all wheel drive, leather hot seats, navigation system, reverse camera, remote start, loaded, only 20,000 actual miles, Ford program vehicle, show floor new, dark metallic grey finish ..... **SALE $36,900**

'21 FORD ESCAPE TITANIUM – 4 door, 4x4, leather hot seats, navigation system, reverse camera, new tires, aluminum wheels, loaded, one owner, 39,000 acutal miles, sold & serviced by us since new, gorgeous bronze finish **SALE $29,995**

'21 FORD ESCAPE – 4x4, 4 door, only 4,000 actual miles (not a misprint). Like new. Gorgeous gold finish, factory warranty ..... **SALE $29,995**

'20 CADILLAC XTS - all wheel drive SUV, premium luxury model, ONLY 14,000 ACTUAL MILES, this vehicle looks like it's still sitting on the new car sh... SOLD ...mote start, leather hot and cold sea... ...everse camera, navigation system, power lift gate, aluminum wheels and more, gorgeous metallic ruby red finish. Save $1,000s from new vehicle cost . **SALE $39,900**

'08 FORD TAURUS X SUV – AWD 4x4, 3rd seat, leather, aluminum wheels, luggage rack, rust free, looks and runs great..... **SALE $9,995**

'19 FORD F150 XLT SUPER CREW – 4x4, 4 door, 40,000 actual miles, Ford program vehicle, box liner, navigation system, reverse camera, trailer tow package, XLT power equipment group, curve control, collision assist and more. Remaining factory warranty, gorgeous dark blue finish, show flooor new ..... ***Was $41,900*** **SALE $40,900**

'17 FORD EDGE SEL - all wheel drive, 50,000 actual miles, leather hot seats, navigation system, reverse camera, show floor new inside and out ..... **SALE $24,900**

'17 CHEVY SILVERADO 1500 CREW CAB - HIGH COUNTRY 4x4, 6.2 V8, power moon roof, reverse camera, leather hot and cold seats, trailer tow package, chrome wheels, spray in bed liner, tonneau cover, remote start, show floor new - this vehicle stands out in a crowd, jet black, plus lots of chrome. Why pay $70,000-$75,000 for new? .....**SALE PRICED**

'20 KIA SOUL - 5 door hatchback SUV, 27,000 actual miles, one owner, reverse camera, show floor new, metallic dark grey finish ..... **SALE $21,900**

'16 MAZDA CX-5 - all wheel drive SUV, looks and runs like new, reverse camera, air, aluminum wheels, leather seat covers, Sky Active technology, gorgeous metallic blue finish. Great vehicle to send that student back to school with ..... **SALE $15,900**

'13 CADILLAC SRX SPORT UTILITY – 4 door luxury SUV, 4x4, V6, automatic transmission, air, navigation system, reverse camera, power moon roof, leather seats, hot seats, lane keeping system, power lift gate, remote start, rust free, show floor new, white color, why pay $60,000 $70,000 for new? ..... **SALE $15,900**

WE BUY USED VEHICLES!
See our full inventory at *tomheffernanford.com*

Come & check out our great selection of used 4x4 Ford, Chevy, GMC & Dodge trucks!

SALES DEPARTMENT OPEN
Monday-Friday Until 5 P.M.
Saturday Until 3 P.M.
Evenings By Appointment

SERVICE DEPARTMENT OPEN
Monday-Friday 7 A.M.-5 P.M.
Saturday Until 12 Noon

Dealer #12446
PHONE 651-345-5313
TOM HEFFERNAN FORD
310 N. Lakeshore Drive Lake City
Ford Cars · Ford Trucks



Volunteer Opportunities

Lions Seek Volunteers - The Lake City Lions Club is looking for additional drivers to deliver meals to Lake City residents for the Home Delivered Meals program. Drivers deliver meals weekdays starting at 4:30 p.m. The time to deliver a route in the city is less than one hour per day. Drivers deliver for the full week three times per year. For more information contact Jon Gravenish at 507-358-6901 or *jbgrav27@gmail.com*.

Senior Dining Assistant - Semcac at Lake Pepin Plaza is seeking community volunteers for assisting the site manager in serving meals. Call Lake Pepin Plaza 651-345-5977 between 10 a.m. and noon Monday through Friday.

Animal Foster Caregiver - The Hiawatha Animal Humane Society (HAHS) is seeking foster homes for cats and dogs. HAHS supplies food, vet care and other supplies. The foster caregiver provides love and care, plus a willingness to help determine the best future home for the pet at the appropriate time. People can 651-448-0396 for more information.

The Lake City Graphic

Single copies available at these local retail locations:

Lake City Fresh Market • Marien's Deli
US Gas • J&J Liquor • Kwik Trips
***61 Express** in Frontenac*

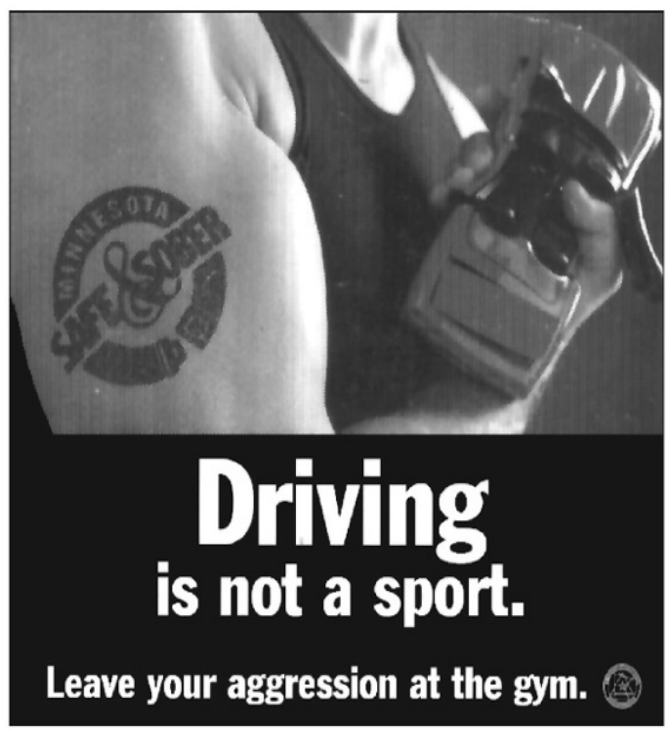







The Lake City Graphic/Shopper Classifieds

The Classifieds Attract Buyers.

Looking to sell your used car, sofa, exercise equipment or anything else under the sun? Place an ad in the Classifieds! It's a fast, easy and profitable way to get rid of your unwanted items locally.

Call 651-345-3316 or email ads@lakecitygraphic.com today to place your ad.

LAKE CITY AA MEETINGS

Tuesday AA
St. Mark's Episcopal Church • 7 P.M.

Thursday AA
St. Mark's Episcopal Church • 7 P.M.

Saturday AA
St. Mark's Episcopal Church • 8:30 A.M.

St. Mark's church is located at
110 South Oak Street

WANTED
JUNK CARS & OLD IRON
Will Pick Up • Call Day or Night!
PHONE 507-753-2380
MILLVILLE AUTO SALVAGE

Lake City Al-Anon Family Group
Thursdays, 7 P.M.
Redeeming Grace Community Church
213 N. Oak Street
Help for families and friends of alcoholics.

Pass it on THRIFT SHOP

Have items to donate?
Bring them by during business hours.

Interested in volunteering at the shop?
Call us!

Thrift Shop Hours
Mondays 10 am - 4 pm
Thursdays 4 pm - 7 pm
Saturdays 9 am - noon

118 North Oak Street
Lake City, Minnesota
Phone 651-345-4901

LAKE CITY TOWNHOMES & APARTMENTS
Now Taking Applications
1, 2 & 3 Bedroom
Rent based on income, no voucher required. Non-Smoking.
1109 N. High St., Lake City
PHONE: 651-345-5470
Contact:
lakecity@bergstad.com
for an application.
Equal Opportunity Housing

Volunteer Opportunities

Riding Therapy - RideAbility is seeking volunteers to work with people and horses providing therapy for people with special needs. Classes are held in the Pine Island area. More information at *www.rideability.org* or by calling 507-271-8908.

Crisis Line Operator - HOPE Coalition is looking for volunteer advocates to support victims of sexual assault in Goodhue and Wabasha Counties. Volunteers answer the 24-hour crisis line. Information available at *hope-coalition.org* or by calling 651-388-9360, ext. 1.

Leland's Appliance Repair
Fast Reliable Service
All major household appliances serviced
507-399-1303
Wabasha, MN

New to Lake City?
call
Welcome Services For You
Bringing newcomers, businesses & community together since 1946
Kathy & Chuck Bristol
(651) 345-9111
Is Your Business Included in our New Packet?

LAKE CITY RECYCLING
Serving all your Rolloff/ Dumpster needs.
Fully Licensed, Bonded & Insured
Office Hours: Monday-Friday: 8 AM - 4 PM
WEDNESDAYS
8 AM - 3 PM: • Demolition • Household Debris
Phone: 651-345-4224

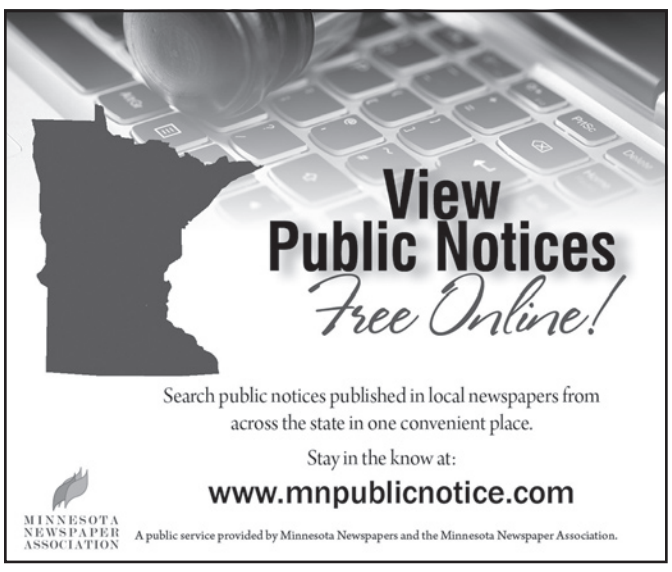



The Lake City Graphic is available online!

www.lakecitygraphic.com

Free online access with your paid print subscription or online access anywhere for only $48/year!





Now you can read the Graphic in print and on your computer, tablet or smartphone!

Current print subscribers may request online access by emailing *graphic@lakecitygraphic.com* or by calling 651-345-3316 (M-Tu 8am-4pm. W-Th-F 8am-3pm).

Print subscribers outside of Wabasha and Goodhue Counties may convert to an *Online Only* subscription and have the remaining portion of their print subscription extended at the *Online Only* rate.

Free online access to print subscribers!

New Subscriber Options

Print Subscription	1 Year	2 Years
Wabasha & Goodhue Counties	$48.00	$88.00
Continental United States	$64.00	$120.00
Alaska/Hawaii $72.00/year	Canada $195.00/year	

All print subscriptions include online access!

Online Only Subscription $48.00/year anywhere

To subscribe, please remit payment using one of the following options:

Online - www.lakecitygraphic.com/subscribe

By phone - 651-345-3316 M-Tu 8am-4pm, W-Th-F 8am-3pm

By mail or in person - Return completed New Subscription Order Form with payment to
The Lake City Graphic
111 S. 8th St. • P.O. Box 469
Lake City, MN 55041

NEW SUBSCRIPTION ORDER FORM

Name _____

Address _____

City _____

State _____ Zip Code _____

email* _____

Phone # _____

Check One: Print Only _____ Online Only _____ Print & Online _____

***Required only if requesting online access**

HALL'S CONSTRUCTION
Small Business Craftsmanship, Big Business Results
One-on-one consulting for: • New Home Construction
• Additions/Remodeling • Kitchen Remodels • Porches
• Custom Made Cabinets • Siding and Windows • Re-roofing and Decks
Competitive prices for all projects - big and small.
BRIAN HALL • 507-421-6046
Insured & Licensed License #BC 63850



LOOKING FOR PART TIME milker on a 200 cow dairy farm. Dale Kackmann, 651-380-6955. 32-45tfc

PART TIME CLEANER wanted. Looking for reliable person to clean commercial buildings in Wabasha. 50 hours every two weeks. $13 per hour to start. Contact Mark, 507-280-6721.

AUGIE'S TRUCKING has immediate openings for full and part time drivers. Day and night shift available. No forced dispatch. PTO, holiday pay and retirement options. Call Augie at 651-238-1490. 49-37tfc

MOBILE HOME LOTS FOR RENT. Edge of Town Mobile Home Park has newly built lots available now. Ph. 651-345-2309 or 651-565-2889. 32-20tfc

LAKE PEPIN – Rare Bluff-top, lake view parcels from $80k. 4 miles to Lake City. *lakepepinhomesites.com*. Buyer's agent welcome. Ph. 651-345-6122. 20-8tfc

BLUFF-TOP FARM HOUSE for sale: 7+ bluff-top acres, outbuildings, partial lake view 5 mi. from Lake City. $320k View at *https://www.vrbo.com/472013*. Buyers agent welcome. Ph. 651-345-6122. 14-27tfc

3 BEDROOM apartment in duplex with garage for rent, located in the country near Lake City. Available Sept. 6. No pets. Photos on Craigslist Rochester under apartments. $850/month. Phone 507-951-3545. 27-15tfc

View Legal Notices *FREE Online!*




At Gundersen St. Elizabeth's Hospital and Clinics, we've made it our priority to enrich the lives of our employees as they find a career they love.
Using each employees' unique talents, we're committed to delivering exceptional care close to home.
FIND A JOB YOU LOVE BY SEARCHING OPEN POSITIONS AT WWW.GUNDERSENHEALTH.ORG/CAREERS
GUNDERSEN
ST. ELIZABETH'S HOSPITAL AND CLINICS

LAKE CITY FOOD SHELF
600 South 8th Street
Hours of Operation:
Tuesday 1 P.M. - 3 P.M.
Thursday 9 A.M. - 11 A.M.
2nd & 4th Saturdays
9 A.M. - 11 A.M.
Contact:
Phone: 651-345-5888
Email:
lakecityfoodshelf@gmail.com

For *FAST* results, advertise in the CLASSIFIEDS.


Call 651-345-3316 to place your classified ad today!

Lake City Public Schools
300 South Garden Street
Lake City, MN 55041

HIGH SCHOOL VACANCY at ISD 813

Full Time
Para-Professional

at LINCOLN JR.-SR. HIGH SCHOOL
Lake City, MN 55041

Application deadline: until filled

All interested applicants should send a cover letter and resume to:

Mr. Greg Berge
High School Principal
Lake City Public Schools
300 S. Garden St.
Lake City, MN 55041
gberge@lake-city.k12.mn.us
651-345-4553

Lake City Public Schools is an Equal Opportunity Employer

JOB POSTING:
Lake City Public Schools - ISD 813

Early Childhood Paraprofessional

Monday/Wednesday/Friday
8:15-11:15 & 12:20-3:30
Tuesday/Thursday 12:20-3:20
Additional hours available when Early Childhood Family Education is in Session

Position starts 1/19/2024

Apply online or send resume to:

Amanda Kvasnicka, Director
Lake City Community Education
1156 W. Lakewood Ave.
Lake City, MN 55041
akvasnicka@lake-city.k12.mn.us
651-345-7170

Lake City Public Schools is an Equal Opportunity Employer.

TRUGREEN
Live life outside.®

Get the most out of your lawn this summer.
Save now with **50% OFF*** Your First Application
TruGreen® experts have designed over 50 regionally-based lawn programs based on local variables such as climate, soil, weeds, insects, and grass types.
TRUGREEN GUARANTEE TruGreen will gladly visit your property as needed between scheduled visits to ensure your satisfaction◆
Our TruGreen Lawn Assessment will examine your grass and soil types and tailor your plan based on the results.†
Our tailored lawn plans utilize the latest technology and techniques that help make your lawn green and healthy.
Call for your FREE, no-obligation quote today!
1-866-326-1992
*Requires purchase of annual plan. Special price is for first Lawn application only. Requires purchase of annual plan, for new residential EasyPay or PrePay customers only. Valid at participating TruGreen locations. Availability of services may vary by geography. Not to be combined with or used in conjunction with any other offer or discount. Additional restrictions may apply. Consumer responsible for all sales tax. †Purchase of annual lawn plan required forTruGreen Lawn Assessment, which is performed at the first visit. ◆Guarantee applies to annual plan customers only. BBB accredited since 07/01/2012. ©2023 TruGreen Limited Partnership. All rights reserved. In Connecticut, B-0153, B-1380, B-0127, B-0200, B-0151.

River Oaks at Lake Pepin
Come join our team at River Oaks at Lake Pepin.

We are currently hiring full-time and part-time Resident Assistants, Nursing Assistants and TMAs at our Lake City location.

Hire bonus potential to $5,000.

We are seeking Resident Assistants (RA), Nursing Assistants (CNA) and Trained Medication Aides (TMA) to join our team at our assisted living facility! You will work alongside other professionals to provide exceptional care to our residents.

We are currently looking for full-time and part-time employees for all shifts. Please join our team as we serve our residents with a commitment to compassion, excellence, and innovation.

Responsibilities:
- Assist the nurse to provide ongoing patient care
- Ensure residents maintain physical, mental, and dietary health
- Communicate resident health status to other medical personnel
- Medication administration and set up
- Resident documentation

Qualifications:
- Previous experience in patient care or other medical fields preferred but not necessary
- Experience with medication administration preferred but not necessary
- Basic knowledge of medical terminology preferred
- Ability to build rapport with residents
- Excellent written and verbal communication skills

Pay Scale: Up to $20 per hour.

Hayley Solis, LALD Administrator, River Oaks at Lake Pepin
815 N. High St., Lake City, MN 55041
Ph. 651-345-2713 • Fax 651-345-5336
Email: *solis.hayley@riveroaksmn.com*


Build Your Business
Advertise in the Lake City Shopper & Graphic
Call 651-345-3316 today!